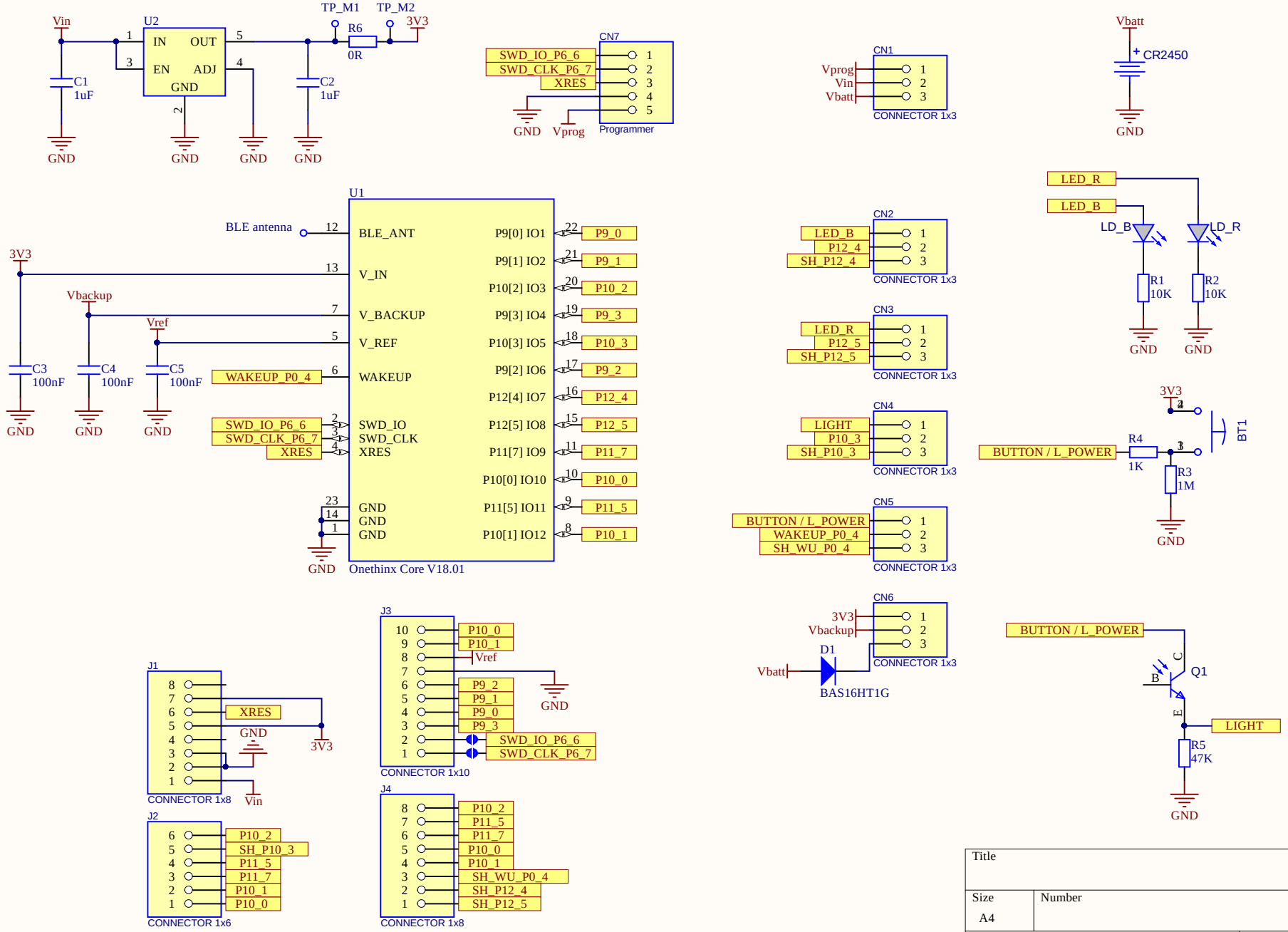

Title		
Size A4	Number	Revision
Date: 6-3-2019	Sheet of	
File: R:\CAD\..\OT_LoRaWAN_Kit_01.SchDoc	Drawn By:	

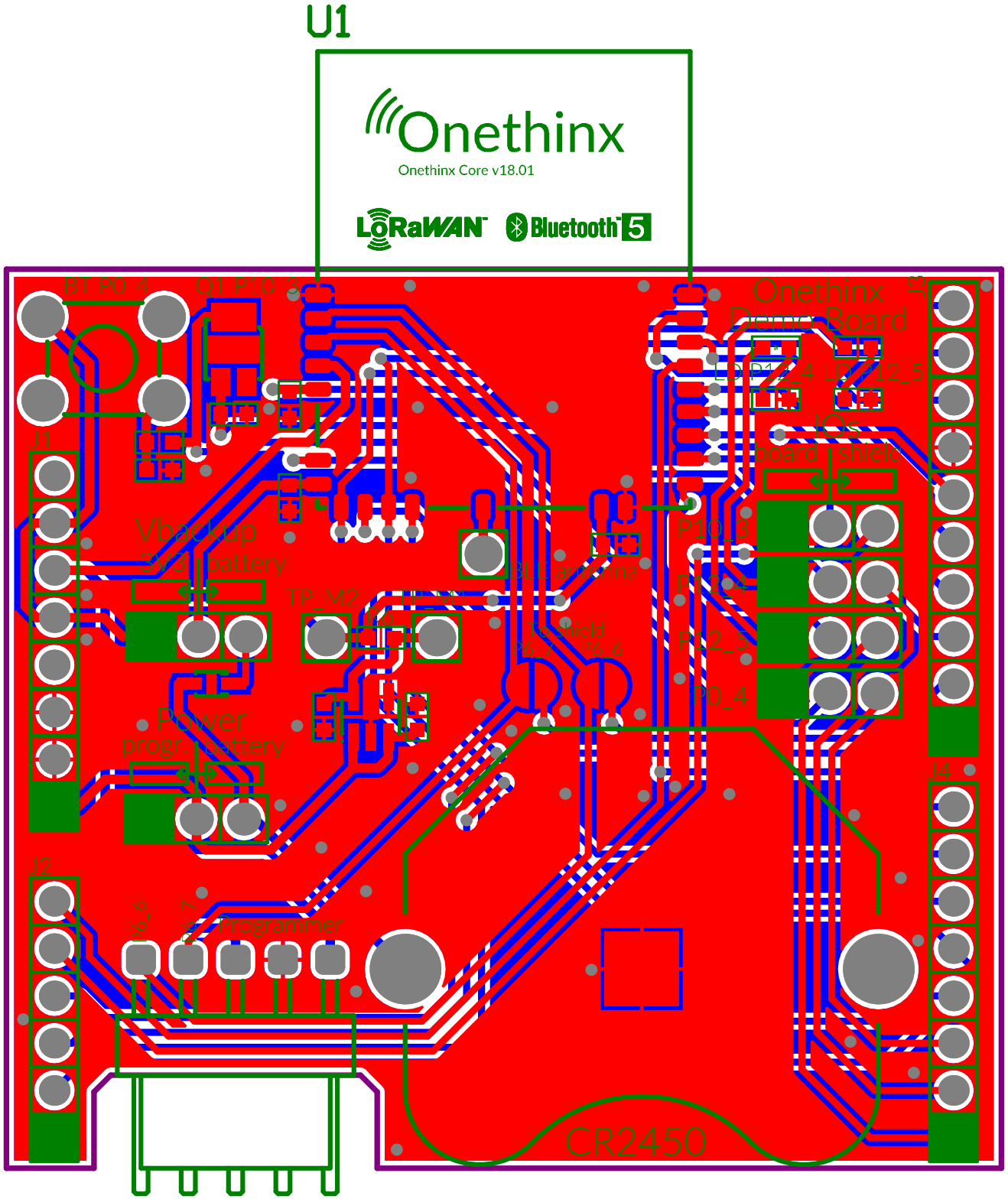
U1
Onethinx
Onethinx Core v18.01
LoRaWAN
Bluetooth 5
BT P0_4
Q1 P10_3
Onethinx
Demo Board
J3
LED P1_4
LED P2_5
IOs
board shield
J1
Vbackup
3V3 battery
TP_M2
TP_M1
BLE antenna
P10_3
P1_4
P2_5
P0_4
P6_7
P6_6
Power
progr. battery
J4
J2
Programmer
CR2450